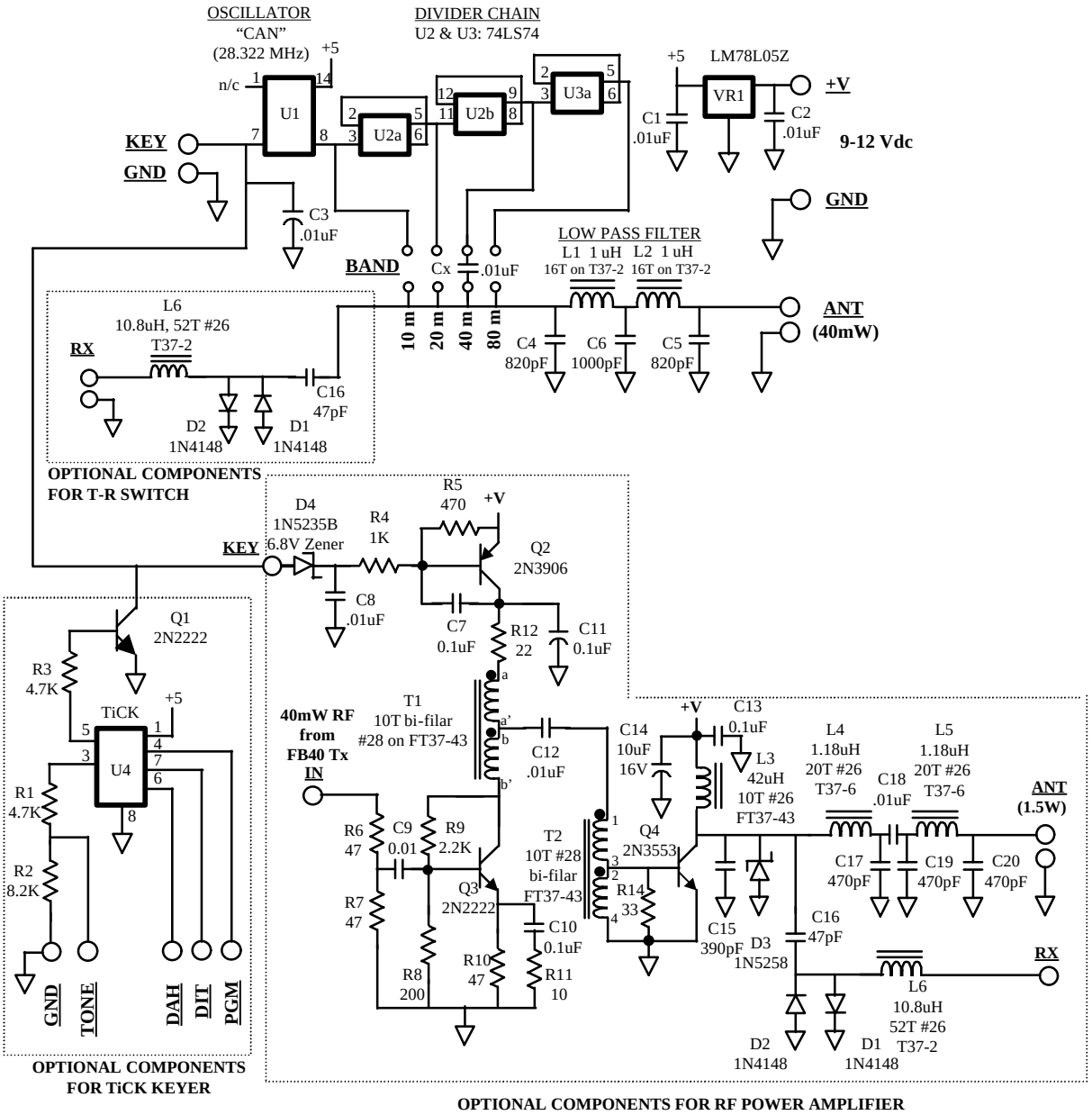

Figure 3: Schematic for the JERSEY FIREBALL 40